CHUAN LAM PRODUCTION PTE LTD

your one stop furnishing rental

.. furniture . LEDs . carpet . pipes & drapes . staging . landscaping..

12 LOYANG WALK #01-01 SINGAPORE 508795
TEL: +65-6742 9360 HP: +65-8823 4286
Sales@CLProduction.com.sg
REG NO: 201434500K

BAR COUNTERS

Delivery Time/ Rates Per Setup or Teardown

During office hours, Mon to Sat, 9am to 7pm

Setup =**10ft truck** S$120 - $180, **14ft truck** S$ 180 - S$250, **24ft truck** S$350-$500, **29ft truck** S$500 - S$900

Teardown =**10ft truck** S$100 - $160, **14ft truck** S$150 - S$220, **24ft truck** S$300-$450, **29ft truck** S$450 - S$800

After office hours, Sundays, PH (Public Holiday) and eve of PH

Setup = **10ft truck S$ 150 - S$220, 14ft truck S$ 250 - S$400, 24ft truck S$600-$700, 29ft truck S$800 - S$1000**

Teardown =**10ft truck S$ 130 - S$180, 14ft truck S$ 220 - S$320, 24ft truck S$500-$600, 29ft truck S$650 - S$850**

NOTE: Quotes are based on the items enquired. Rental prices may change without prior notice.

Number of rental of days is from SET UP date/ time to TEAR DOWN date/ time. Prices are before GST, Manpower & Delivery Charges. To request for an official quote kindly provide the ff event details:

COMPANY DETAILS | SET UP date & time |TEAR DOWN date & time | VENUE | ITEM CODE & QTY

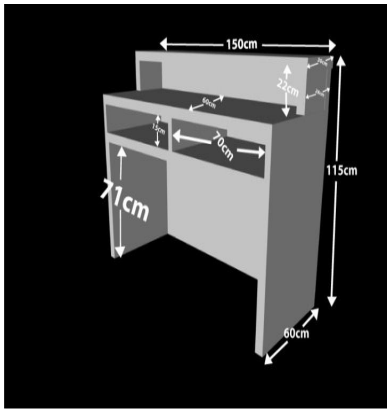

BCT02
Lighted Bar Counter

ITEM CODE: BCT02 / Lighted Bar Counter

DIMENSION: 1500L mm * 600D mm * 1150H mm

PRINTING AREA: 1450L mm * 1100H mm

SALE PRICE: $1400 Brand New (lead time 3weeks)

MATERIAL: Acrylic front panel with laminated wooden structure

REMARKS:

INVENTORY: 8 White (4 Warm light / 4 Daylight) / 1 White (No light) / 1 Black

OPTION: To dress up counter into another color $300

RENTAL PRICE:
*No graphic
1 - 3 days : $250
4 - 6 days : $300
7 - 14 days : $380
15 - 30 days : $500

RENTAL PRICE:
*With graphic
1 - 3 days : $530
4 - 6 days : $580
7 - 14 days : $660
15 - 30 days : $780

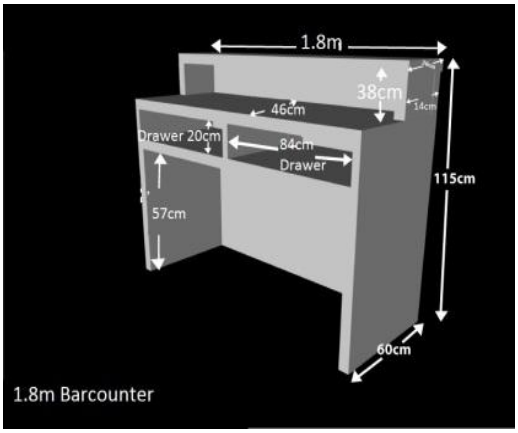

BCT04
1.8m Lighted Bar Counter

ITEM CODE: BCT04 / 1.8m Bar Counter

DIMENSION: 1800L mm * 460W mm * 1150H mm

PRINTING AREA: Print area 1100H * 1750L mm

MATERIAL: Acrylic front panel with laminated wooden structure
*with 2 lockable drawers

REMARKS:

INVENTORY: 1 Currently in Silver colour

OPTION: To dress up counter into another color $350

RENTAL PRICE:
*No graphic
1 - 3 days : $300
4 - 6 days : $400
7 - 14 days : $550
15 - 30 days : $680

RENTAL PRICE:
*With graphic
1 - 3 days : $600
4 - 6 days : $700
7 - 14 days : $850
15 - 30 days : $980

BCT05
Lighted Manhattan Bar Counter

ITEM CODE: BCT05 / Lighted Bar Counter

DIMENSION: Rectangle Bar Counter: 1170H mm * 400D mm * 2040L mm
Corner Triangle Counter: 1170H mm * (3sides L) 670mm each

PRINTING AREA: Rectangle bar counter: 960H mm * 1960L mm
Corner bar counter: 960H mm * 530L mm

MATERIAL: LED lited glass panel with stainless steel and wooden finishing

REMARKS: * come with GS table with black cover 6ft by 2ft

BCT05-1
Lighted Rectangle Bar Counter

ITEM CODE: BCT05-1 / Lighted Rectangle Bar Counter

DIMENSION: 1170H mm * 400D mm * 2040L mm

PRINTING AREA: 960 mm * 1960 mm

MATERIAL: LED lited glass panel with stainless steel and wooden finishing

REMARKS: *comes with a GS table with black cover 6ft by 2ft

INVENTORY: 14 No Sticker / 1 BLACK Sticker

OPTION: Graphic printing @ $280
To dress up counter into another color $300

RENTAL PRICE:
*No graphic
1 - 3 days : $350
4 - 6 days : $500
7 - 14 days : $700
15 - 30 days : $900

RENTAL PRICE:
*With graphic
1 - 3 days : $630
4 - 6 days : $780
7 - 14 days : $980
15 - 30 days : $1180

BCT05-2
Lighted Corner Triangle Bar Counter

ITEM CODE: BCT05-2 / Lighted Corner triangle bar counter
DIMENSION: 1170H mm * (3sides L) 670mm each * 480W mm
PRINTING AREA: 960mm * 530mm
MATERIAL: LED lited glass panel with stainless steel and wooden finishing
REMARKS:
INVENTORY: 4 pcs
OPTION: Graphic printing @ $100

RENTAL PRICE:
*no graphic
1 - 3 days : $80
4 - 6 days : $120
7 - 14 days : $160
15 - 30 days : $220

RENTAL PRICE:
* With graphic
1 - 3 days : $180
4 - 6 days : $220
7 - 14 days : $260
15 - 30 days : $320

BCT05-3
Non-lighted Rectangle Bar Counter

ITEM CODE: BCT05-3 / Non-lighted Rectangle Bar Counter - Cream
DIMENSION: 2040L mm * 400D mm * 1170H mm
MATERIAL: Oriental design formica with stainless steel and wooden finishing
REMARKS: *comes with a GS table with black cover 6ft by 2ft
INVENTORY: 10 pcs

RENTAL PRICE:
*Non-lighted Rectangle bar counter
1 - 3 days : $250
4 - 6 days : $350
7 - 14 days : $480
15 - 30 days : $600

BCT05-4

Non-Lighted Corner Triangle Bar Counter with Shelving

ITEM CODE: BCT05-2 / Non-Lighted Corner triangle bar counter with shelving

DIMENSION: 1170H mm * (3sides L) 670 mm each

MATERIAL: Stainless steel top with wooden base

REMARKS:

INVENTORY: 1 pcs

RENTAL PRICE:

*Non-lighted Triangle counter

1 - 3 days : $50
4 - 6 days : $80
7 - 14 days : $100
15 - 30 days : $120

LBC01

LED Plain Corner Bar Counter

ITEM CODE: LBC01 / LED Plain Corner Bar Counter

Modular bar counter with storage underneath.

SALE PRICE: DISPLAY SET ONLY @$2500 EACH

DIMENSION: 740L mm * 740W mm * 1145H mm

MATERIAL: Waterproof Plastic Material. LED Light. 16 colors flashing,

stationary & fading mode Wireless,

Precharge 6 hrs, usage 4-5hr in station mode, 2 hr in Flashing mode

REMARKS: Indoor/ Outdoor

INVENTORY: 2pcs

RENTAL PRICE:

1 - 3 days : $100
4 - 6 days : $150
7 - 14 days : $220
15 - 30 days : $300

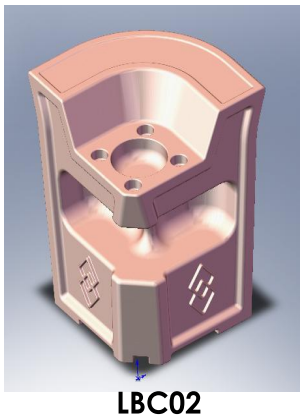

LBC02

LED Corner Bar Counter

ITEM CODE: LBC02 / LED Corner Bar Counter
Modular bar counter with storage underneath & bottle holder on top.

SALE PRICE: DISPLAY SET ONLY @ $2700

DIMENSION: 740L mm * 740W mm * 1145H mm

MATERIAL: Waterproof Plastic Material. LED Light. 16 colors flashing,
stationary & fading mode Wireless,
Precharge 6 hrs, usage 4-5hr in station mode, 2 hr in Flashing mode

REMARKS: Indoor / Outdoor

INVENTORY: 1pc

RENTAL PRICE:
1 - 3 days : $100
4 - 6 days : $150
7 - 14 days : $220
15 - 30 days : $300

LBC03

LED Modular Bar Counter with ice box

ITEM CODE: LBC03 / LED Modular Bar Counter
Modular bar counter with storage underneath.

SALE PRICE: DISPLAY SET ONLY @$2700 EACH

DIMENSION: 900L mm * 720W mm * 1120H mm

MATERIAL: Waterproof Plastic Material. LED Light. 16 colors flashing,
stationary & fading mode Wireless,
Precharge 6 hrs, usage 4-5hr in station mode, 2 hr in Flashing mode

REMARKS: Indoor/ Outdoor

INVENTORY: 2pcs

RENTAL PRICE:
1 - 3 days : $100
4 - 6 days : $150
7 - 14 days : $220
15 - 30 days : $300

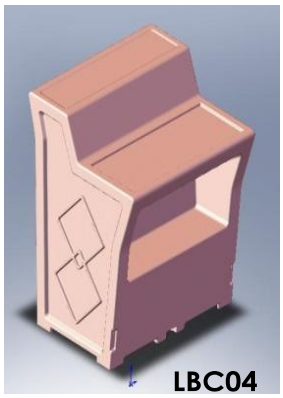

LBC04

LED Plain Modular Bar Counter

ITEM CODE: LBC04 / Modular bar counter with storage underneath

SALE PRICE: DISPLAY SET ONLY @ $2700

DIMENSION: 900L mm * 720W * 1120H mm

MATERIAL: Waterproof Plastic Material. LED Light. 16 colors flashing,
stationary & fading mode Wireless,
Precharge 6 hrs, usage 4-5hr in station mode, 2 hr in Flashing mode

REMARKS: Indoor / Outdoor

INVENTORY: 2pcs

RENTAL PRICE:

1 - 3 days : $100
4 - 6 days : $150
7 - 14 days : $220
15 - 30 days : $300

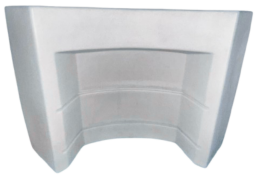

LBC05

LED Corner Circular Bar Counter

ITEM CODE: LBC05 / LED Corner Circular Bar Counter

SALE PRICE: DISPLAY SET ONLY @ $2700

DIMENSION: 1525L mm * 355D mm * 1060H mm

MATERIAL: Waterproof Plastic Material. LED Light. 16 colors flashing,
stationary & fading mode Wireless,
Precharge 6 hrs, usage 4-5hr in station mode, 2 hr in Flashing mode

REMARKS: Indoor/ Outdoor

INVENTORY: 8pcs (3 Cream / 5 Off white)

RENTAL PRICE:

1 - 3 days : $120
4 - 6 days : $180
7 - 14 days : $250
15 - 30 days : $330

LBC06

LED Straight Bar Counter

ITEM CODE: LBC06 / LED Straight Bar Counter

SALE PRICE: DISPLAY SET ONLY @ $2700

DIMENSION: 1065L mm * 360W mm * 1065H mm

MATERIAL: Waterproof Plastic Material. LED Light. 16 colors flashing, stationary & fading mode Wireless, Precharge 6 hrs, usage 4-5hr in station mode, 2 hr in Flashing mode

REMARKS: Indoor / Outdoor

INVENTORY: 10pcs (3 Cream / 6 Off white)

RENTAL PRICE:

1 - 3 days : $120
4 - 6 days : $180
7 - 14 days : $250
15 - 30 days : $330